Si-30, Si-33 (115 V ~ 60Hz)
Split & Multisplit System

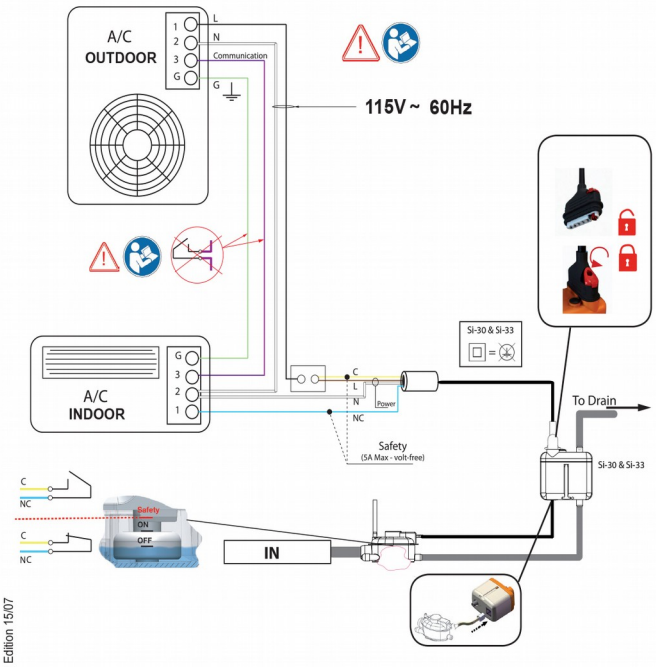

Si-30, Si-33 (115 V ~ 60Hz)
VRF System

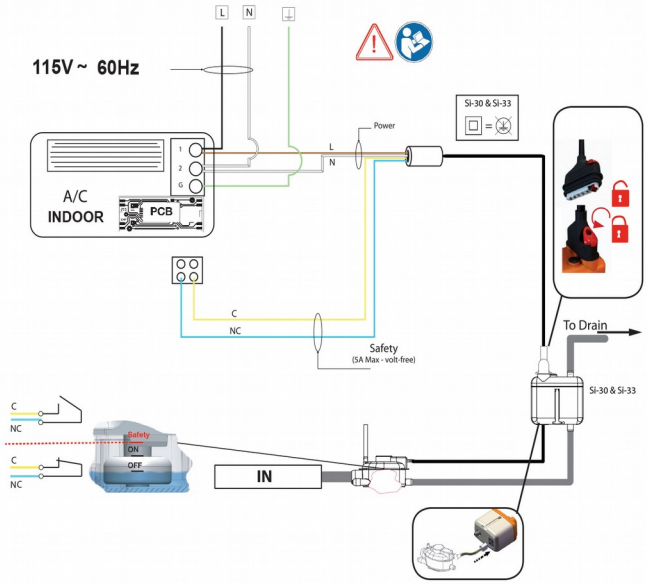

00 Edition 15/07

Si-30, Si-33 (208-230 V ~ 60Hz)
Split & Multisplit System

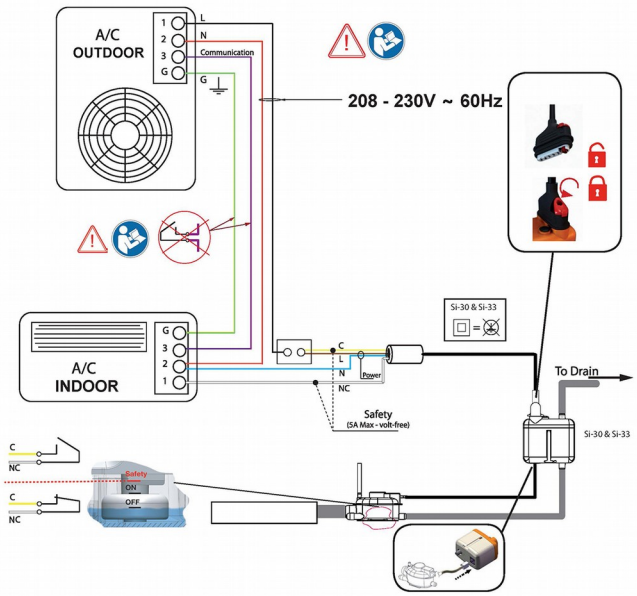
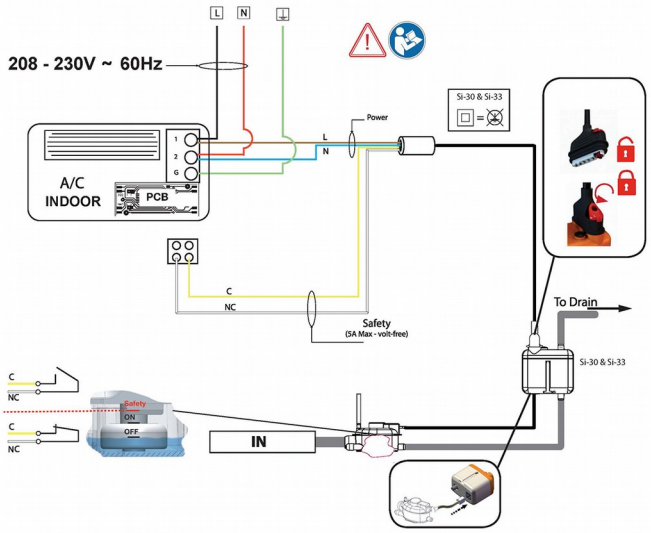
Si-30, Si-33 (208-230 V ~ 60Hz)
VRF System